Door Viewer

RDF-V-001
Glass Door Viewer 200°
Brass

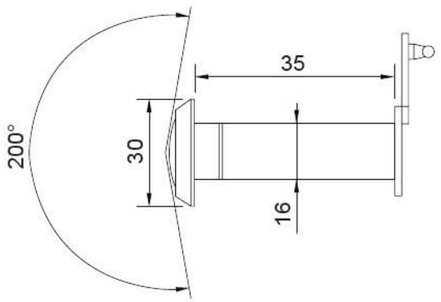

Feature and Data:

- Size : 46×30 mm
- Application : Wooden entrance door
- Material : Brass body, Glass lens
- Door thickness : 35-55 mm
- Finish : Chrome Plated
- Viewing Angle : 200 Degree

RDF-V-002
Glass Door Viewer 200°
Steel

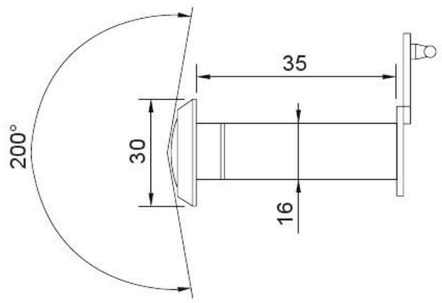

Feature and Data:

- Size : 46×30 mm
- Application : Wooden entrance door
- Material : Steel body, Glass lens
- Door thickness : 35-55 mm
- Finish : Chrome Plated
- Viewing Angle : 200 Degree

RDF-V-055
Electronic Door Viewer 5.5"

Technical Data:

- Screen size : 5.5 inches
- Body Casing Material : ABS
- External Pixel Camera : 1080P
- Screen resolution : 1280×720
- Viewing angle : 170 Degree
- IR-CUT filter : Yes
- Motion Detection : Yes
- Format video : MP4
- Local memory : 8 GB
- Support for Micro-SD cards up to 128 GB
- Battery Capacity : 8000 mAh lithium battery
- Capacitive Touch Screen
- 1/2.7" Ultra-Low Power Digital Sensor

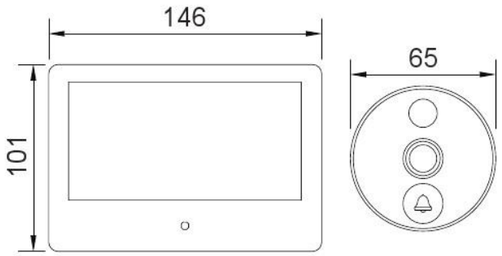

Features:

- Wide display
- 170 degrees wide angle view
- Infrared night vision
- Motion detection
- Anti-Peeping
- Get instant alert
- Talk to visitor from anywhere
- Built-in Speaker Microphone for 2 Way Communication
- Free cloud storage (15 days)

RDF-A-070

Electronic Door Viewer 7"

Technical Data:

- Screen size : 7 inches
- Body Casing Material : ABS
- External Pixel Camera : 1080P
- Internal Indoor : 3 Mega pixel
- Screen resolution : 1280×720
- Viewing angle : 170 Degree
- IR-CUT filter : Yes
- Motion Detection : Yes
- Format video : MP4
- Local memory : 8 GB
- Support for Micro-SD cards up to 128 GB
- Battery Capcity : 10000 mAh lithium battery
- Capacitive Touch Screen
- 1/2.7" Ultra-Low Power Digital Sensor

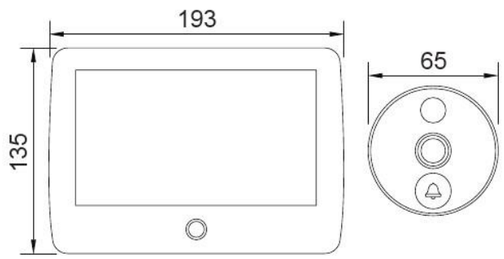

Features:

- Wide display
- 170 degrees wide angle view
- Infrared night vision
- Dual camera
- Motion detection
- Anti-Peeping
- Get instant alert
- Talk to visitor from anywhere
- Free cloud storage
- Built-in Speaker Microphone for 2 Way Communication
- 2 way Intercom Live Video

RDF-QR-39

Electronic Door Viewer 4.3"

Technical Data:

- Screen size : 4.3 inches
- Body Casing Material : ABS
- External Pixel Camera : 1080P
- Screen resolution : 480 x 320
- Viewing angle : 160 Degree
- IR-LED : Yes
- Motion Detection : Yes
- Format video : MP4
- Support for Micro-SD cards up to 128 GB
- Battery Capacity : 5000 mAh lithium battery

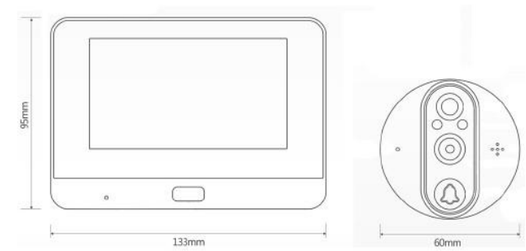

Features:

- Wide display
- 160 degrees wide angle view
- Infrared night vision
- Motion detection
- Anti-Peeping
- Get instant alert
- Talk to visitor from anywhere
- Built-in Speaker Microphone for 2 Way Communication

RAPID

RDF-DDV-205

Smart Door bell

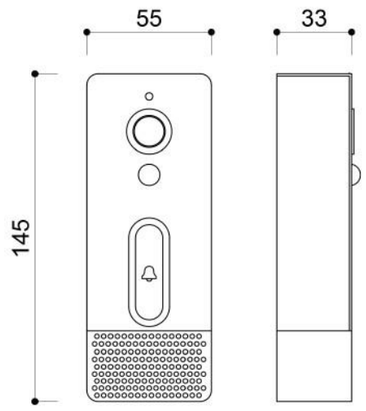

Technical Data:

- Size : 145 x 55 x 33mm
- Body Casing Material : ABS
- External Pixel Camera : 1080P
- Viewing angle : 166 Degree
- IR-CUT filter : Yes
- Motion Detection : Yes
- Format video : MP4
- Support for Micro-SD cards up to 128 GB
- battery Capacity : 5000 mAh lithium battery (18650 x 2)

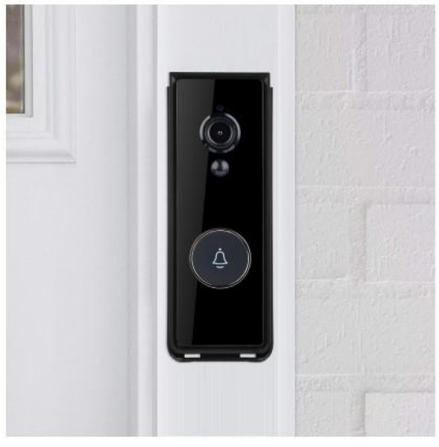

Features:

- Wide angle 166 degree
- Infrared night vision
- PIR Motion detection
- Anti-Peeping
- Get instant alert
- Talk to visitor from anywhere
- Built-in Speaker Microphone for 2 Way Communication